the Fill n' Pour™
Fridge Water Jug

Instruction Book – LWJ100



Breville®

Contents

2 Breville Recommends Safety First
5 Components
6 Functions
8 Care, Cleaning & Storage
9 Troubleshooting

LIMITED PRODUCT WARRANTY

Breville's warranty for this product covers the repair or replacement if it's found to be defective due to faulty materials, workmanship, or function within the warranty period.

All legal warranty rights under applicable national legislation will be respected and will not be impaired by our warranty. For details on length of warranty, to obtain a printed copy or to read full terms and conditions please scan the QR code or visit www.breville.com. Alternatively, call the Breville Service Centre (see back cover for contact details).

QR149

BREVILLE RECOMMENDS SAFETY FIRST

At Breville we are very safety conscious. We design and manufacture consumer appliances with the safety of you, our valued customer, foremost in mind. In addition, we ask that you exercise a degree of care when using any Breville product and adhere to the following precautions. Misuse can cause potential injuries.

IMPORTANT SAFEGUARDS

READ ALL INSTRUCTIONS BEFORE USE AND SAVE FOR FUTURE REFERENCE

- Carefully read all instructions before operating and save for future reference.
- Remove and safely discard any packaging material and promotional labels before using the Breville Fill n' Pour™ fridge water jug for the first time.
- Always ensure the water jug is properly assembled before use. Follow the instructions provided in this book.
- The water jug must only be used with the supplied Breville filter or LWA063WHT replacement filter.

- This water jug has been designed specifically for the purpose of filtering drinking quality water only. Under no circumstances should this water jug be used to filter any other liquids.
- Do not place the water jug near the edge of a bench or table. Ensure that the surface is level, clean and free of water and other substances.
- Do not place the water jug in direct sunlight. Colour fading and discolouration may occur when the water jug is consistently exposed to sunlight.
- Avoid exposing the water jug to direct sunlight, as this may cause residue or foreign substances, such as algae, to accumulate in the jug.
- This water jug is intended to filter tap water only. Do not put water of unknown quality or source into the water jug. Do not use for the preparation of baby food.
- Filter performance tested to NSF 42 standard conditions, fill the water jug with ambient water for optimal performance and put into fridge afterwards. Ice water may affect filter performance and flow rate.
- Do not fill the water jug with hot water. The applicable filled water temperature should be between 5-40°C.
- For certain groups of people (e.g. babies and people with impaired immunity) it is recommended that tap water should be boiled before consumption.
- Store filtered water in a cool place and use within 24 hours.



Disposal and Replacement of Spare Parts

- The Fill n' Pour fridge water jug uses a battery to operate the digital timer. The timer should be removed at the end of the timer lifespan and disposed of properly in accordance with the statutory regulations. Call Breville Customer Service to order new timer spare part.



WARNING

- Keep the water jug and accessories clean. Follow the cleaning instructions provided in this book.
- Any cleaning procedure not listed in this instruction booklet should be performed at an authorised Breville Service Centre.

SPECIFIC INSTRUCTIONS FOR WATER FILTER

- The filter cartridge should be kept out of reach of children.
- Store the filter cartridges in a dry place in the original packaging.
- Protect cartridges from heat and direct sunlight.
- Do not remove from protective packaging from a new filter cartridge until just before use.
- Do not use damaged filter cartridges.
- Do not open filter cartridge housing to access the material inside.
- If you are absent for a prolonged period of time, empty the water jug and replace with a new filter cartridge.
- Refer to 'REPLACING YOUR WATER FILTER' section for further instructions.

FOR HOUSEHOLD USE ONLY
SAVE THESE INSTRUCTIONS

Components

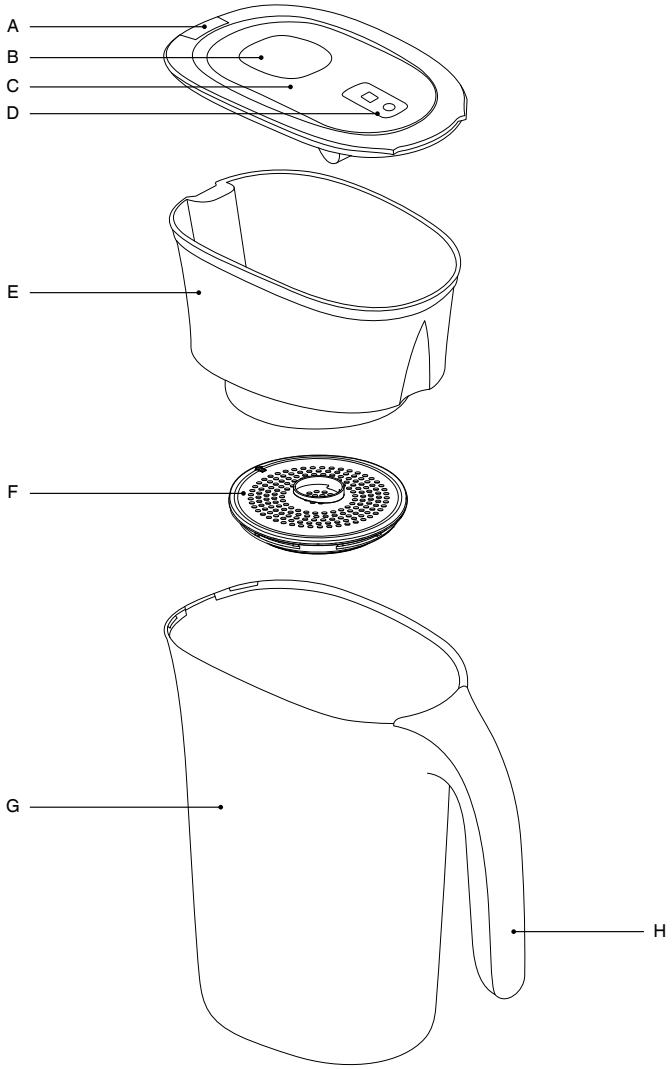

A. Filtered water pouring spout
B. Water flow inlet
C. Removable, clip-on lid
D. 90-day digital timer
E. Upper water chamber (holds the filter and 750ml of pre-filtered water)
F. Active360™ 4-stage fast flow water filter cartridge (reorder code: LWA063)
G. Water jug (1.5L of filtered water)
H. Easy-grip handle

Functions

Your Breville Fill n' Pour™ fridge water jug is a stylish addition to any benchtop, slimline to fit in most regular fridge doors, and is easy to use to achieve cleaner, filtered water.

1. Remove all packaging materials and any promotional labels from your water jug.

2. Remove the water filter located in the upper water chamber and set aside. Follow the instructions in the REPLACING YOUR WATER FILTER section on how to prepare your new filter for first use.

3. Thoroughly clean the water jug and upper water chamber with warm soapy water and a non-abrasive, soft scouring pad, then rinse and dry thoroughly. Wipe the lid with a damp cloth.

4. Reassemble all parts.

ACTIVE360™ 4-STAGE FAST FLOW WATER FILTER

The Breville Fill n' Pour™ fridge water jug, when used with the Active360™ 4-stage fast flow water filtration system, provides cleaner, great tasting filtered water. Four distinct levels of filtration remove contaminants from water that can cause bad taste and odour, which may potentially be harmful to your health.

Stage 1- Pre-Sediment Mesh Filter
Filters microplastics and floating particles

Stage 2- Ion-Exchange Resin Filter
Filters limescale and metals

Stage 3- Activated Carbon Filter
Filters pesticides and chlorine

Stage 4- Post Filter
Filters fine particles

*4-stage fast flow filtration tested and/or certified to remove/reduce microplastics, floating particles/sediment, pesticides, chlorine, limescale & heavy metals.
For more information, visit Breville.com.

REPLACING YOUR WATER FILTER

Your Breville Fill n' Pour™ fridge water jug comes with a compatible Active360™ 4-stage Fast Flow water filter (LWA063). Replacement of the water filter is recommended every 90 days, depending on use. Refer to the TIMER section in this booklet for further details regarding filter replacement.

1. Using the ring tab found on the top of the filter, pull to remove from the upper water chamber and discard.

2. Remove the new water filter from its packaging and immerse the filter in a bowl of tap water, gently shaking until there are no air bubbles. Soak the filter in the tap water for 10 minutes.





3. Once the soak time is complete, remove from the tap water and insert the filter into the filter holder of the upper water chamber. Push down firmly to secure in place.

4. Insert the upper water chamber into the water jug.

5. To flush and activate the new filter cartridge, fill 750ml of water to the upper water chamber, allowing the water to filter through. Discard the collected water. Repeat once more (until a total of 1.5L of water has filtered through).

6. Reassemble the water jug.

NOTE

Water filtration process may alter the taste of the water.

FILLING YOUR BREVILLE WATER JUG

1. Place the water flow inlet directly under a cold-water tap.

2. Turn on the cold water tap slowly. The water will automatically open the water flow inlet (Fig. 1) allowing for the water to gradually flow into the upper water chamber. Fill the water up to the MAX line in the upper water chamber.

CAUTION

Never fill the Breville Fill n' Pour™ fridge water jug with hot or boiling water.

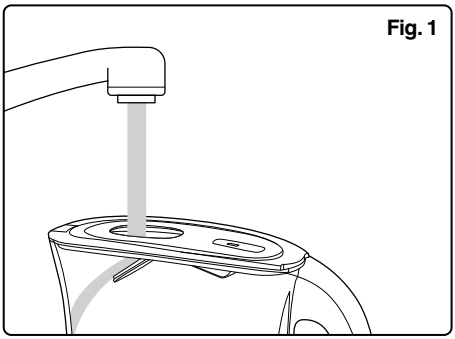

Fig. 1

3. The tap water will filter through the fast-flow water filter down into the water jug. Once the upper water chamber has emptied, the filtered water is ready to use.

4. Store on the benchtop for room temperature filtered water or in the fridge for cold filtered water.

NOTE

The Breville Fill n' Pour™ fridge water jug is designed to fit most regular Australian and New Zealand fridge doors.

Filtered water stored in a fridge may be subject to changes in taste if stored around aromatic food and beverages.

TIMER

Your Breville Fill n' Pour™ fridge water jug comes with a 90-day digital timer which will indicate when filter replacement is recommended. This 90-day timer should be used as a general guide only.

- To activate, press and hold the RESET button on the timer for 3 seconds. '90' will appear, and the 90-day countdown will begin.
- Once the timer flashes '00', it is time to replace the water filter.
- To reset the timer at any time, press and hold the RESET button again until '90' appears once more.
- To turn the timer off, press the RESET button 6 times within 2 seconds.

NOTE

For safety reasons, the button battery in the timer is not an accessible part. When replacement is required, contact Breville Customer Service to order a timer replacement.

WARNING

KEEP BATTERIES OUT OF REACH OF CHILDREN

Ingesting button batteries may lead to serious injury or death due to chemical burns and damage to the oesophagus. If you suspect your child has swallowed button batteries, immediately call the 24-hour Poisons Information Centre on 13 11 26 for professional advice.

Before use, examine the device and make sure the timer compartment is correctly installed. Do not use if the timer compartment is not secure. Dispose of timer properly in accordance with statutory regulations.

Inform others about the risk associated with button batteries and how to keep their children safe.

REPLACING DIGITAL TIMER

Contact Breville Customer Service to order a replacement timer.

1. Remove the lid from the jug and turn over.

2. Using a screwdriver, apply pressure on the tab (Fig. 2) located on the side of timer socket. The timer should dislodge from the timer socket. Discard timer in accordance with statutory regulations.

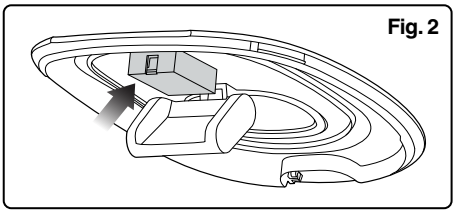

Fig. 2

3. To install the replacement timer, turn over the lid with the timer socket facing upwards. Remove the replacement timer from packaging. Ensure the timer screen is facing upwards with 'DAYS' positioned closest to the spout. Push replacement timer into the socket to secure in place.

4. Replace the lid onto the water jug.

5. Press and hold 'RESET' button to reset timer countdown.

Care, Cleaning & Storage

1. Remove the lid and water filter (discard water filter if replacing). Remove the upper water chamber from the water jug.

2. Thoroughly clean the upper water chamber and water jug with warm soapy water and a non-abrasive, soft scouring pad, rinse and dry thoroughly.

3. Wipe the lid with a damp cloth.

4. Reassemble all parts before using or storing in a cool dry place. If storing for a period of time, do not replace the water filter until next use.

Troubleshooting

PROBLEM	POSSIBLE CAUSE	WHAT TO DO
Filter does not fit in properly.	• Filter has not been pressed in securely.	• Make sure the filter is tightly fitted.
	• O-ring is missing from the filter.	• Check the O-ring on your filter. Replace water filter if necessary.
	• Upper water chamber or filter is damaged.	• Check if the upper water chamber and filter are in good condition. If not, please contact Breville Customer Service.
Odd tasting water.	• Leftover tap water or soap residue.	• Rinse and dry water jug and parts completely.
	• The filter has not been used for long time.	• Discard the remaining water in the water jug and refill with fresh tap water. Depending on the length of time, the filter may require re-flushing.
	• The filter has reached it's end of life.	• Replace with new filter.
	• Overfilling in the upper water chamber.	• Keep water level under the maximum line to prevent mixing overflow of unfiltered water into filtered water compartment.
Slow flow speed during filtering.	• Filter has not been prepared properly before first use.	• Soak and flush the filter before use.
	• The filter might be at the end of life due to more frequent use.	• If slow flow speed persists, replace with new filter.
"00" shows on the display.	• Filter needs to be replaced.	• Replace filter. Press RESET for 3 seconds to reset timer.
Timer display has faded or is blank.	• Timer is turned off.	• Press the RESET button for 3 seconds to turn on.
	• End of battery life.	• Press RESET to turn on timer. If timer does not turn on, contact Breville Customer Service to order timer replacement.



Notes



Notes

Breville Service Centre

Australian Customers

Phone: 1300 139 798

Web: **www.breville.com**

New Zealand Customers

Phone: 0800 273 845

Web: **www.breville.com**

Breville®

Master Every Moment™

Breville, the Breville Logo and Fill n' Pour are trademarks of Breville Pty Ltd ("Breville") and Breville's products are distributed in Australia and New Zealand under license.
Copyright Breville Pty. Ltd. 2023. All other brand names may be trademarks of their respective owners.

Due to continued product improvement, the products illustrated/photographed in this brochure may vary slightly from the actual product.

LWJ100 ANZ – B24